# Smart and Sustainable Seeds

**Marios Pieri & Giannis Liasi**

# Table of Content


- Who we are ?
- What we are doing ?
- Introducing N.T.Somnii & Our Vision
- N.T.Somnii  Education
- Smart and Sustainable Projects
  - Neighbourhood Reliever 2 (Smart Toilet for Dogs)
  - Sea Monitoring Robot
- Sustainability for this initiative

# Who we are ?

- **Marios Pieri**: is an Electronic and Communication Engineer (Hons), specializing in innovating design and rapid prototyping. Passion for introducing new design technology and processes, such as interactive design and experience design, making use of digital tools and 3D printing technology and assembling. Extensive experience in teaching robotics, with a different mix of innovating technologies in order to promote and satisfy students' Learning needs and objectives.

- **Giannis Liasi**: is an owner of Master of Science (MSc) degree, specializing in laser micro-controlling systems with Arduino microcontrollers. His extensive experience of teaching Physics allows him to understand the needs and the importance of creating new innovative courses that will engage and intrigue our students. He is passionate with integrating robotics with physics in order to stimulate learning of science to everyone.

# What we are doing?

- Teaching alternative STE(A)M education courses
- Research and Development based on educational tools and courses
- We are mixing technologies with our students to create innovations and solutions for different local problems

# N.T.Somnii & Our vision

NTSomnii LTD is the abbreviation of Nicola Tesla and the  Latin word ‘Somnii’ which refers to the ability to ‘dream’. Thus ‘Nikola Tesla dreams’.

**VISION:**

Our vision is to develop an educational platform based on Research & Development which will be the bridge between secondary education students and universities students.

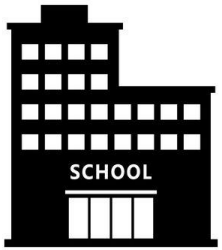

# N.T.S Educational Courses

**NTS - RoboKids**

Target Age
10-12

**NTS - Robotics**

Target Age
12-18

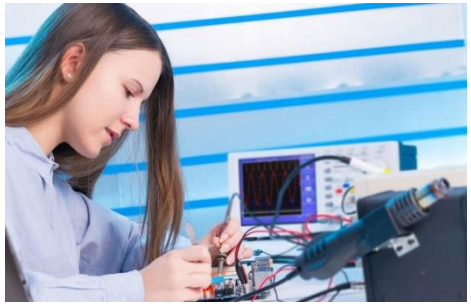

**NTS - SciTech**

Target Age
12-18

# Smart & Sustainable projects

**Neighbourhood Reliever²**
Smart Toilet for dogs
5 Students
Age: 13-15
1st Place
Pancyprian Research & Robotics Competition FFL 2017

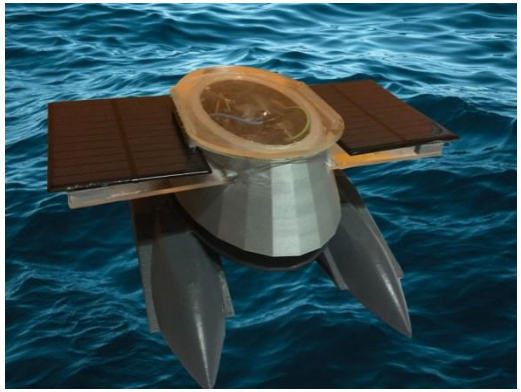

**Sea monitoring Robot**
Oil Sea Detector
2 Students
Age: 14-16

# Neighbourhood Reliever$^2$

**The Problem**:
The faeces of the dogs is one of the most common reason for complaint in the municipalities of Limassol…

- Mostly seen in yards, sidewalks and parks.
- That's create hygiene and aesthetics problems to the community.
- Faeces is there are the reasons for complains, disputes and sometimes resorted to unfair means and animals are the victims.

**Solution of the problem**:
Smart toilet for dogs that can attract dogs with the method of spraying the right amount of ammonia. The feces of the dogs are also free energy so we can convert them to biogas.

# Neighbourhood Reliever²

**ThunderRobots**
Our participation and representation of Cyprus in the FLL 2017
Worldwide Educational Robotics, Research and Innovation Competition in Saint Louis, USA

# Neighbourhood Reliever²

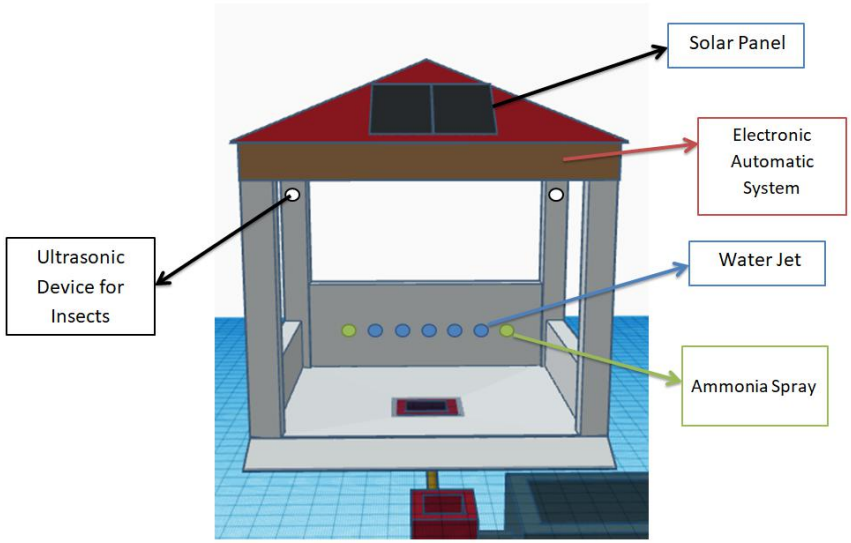


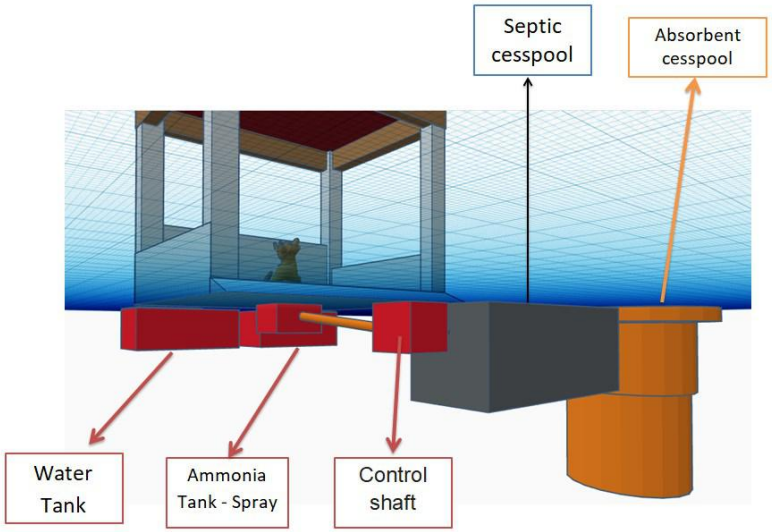


**3D Design of the project**
Transfer from an architecture design to 3D Design

# Neighbourhood Reliever²

**Technical Specs**

- Microcontroller
- Smart Camera
- Solar Panel
- Water Pump
- Batteries
- PIR Sensor
- RFID Tag/Reader
- Ultrasonic Device
- Water pump
- Air pump

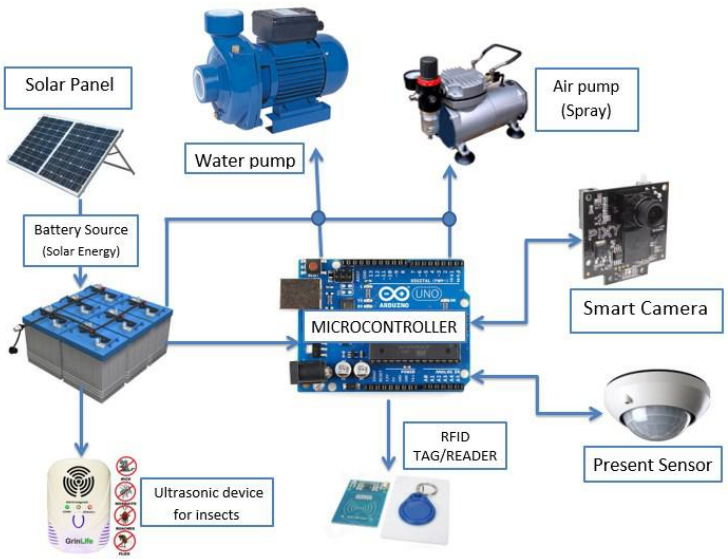

# Neighbourhood Reliever²

**Technical Specification of the structure**

✓It features solar energy power for autonomy.
✓It uses non-potable water.
✓The waste is stored in an underground tank or if possible it can be discharged into the sewerage system.
✓It boasts a level switch which notifies the responsible municipal service for emptying the tank (if it reaches full capacity) and providing supply of special spray and water.
✓ The cleaning system is activated after each use.
✓After each cleaning the area will be automatically sprayed with a special spray that includes ammonia in order to attract the animals.
✓The waste can be converted to a biogas. Free Energy

# Sea Monitoring Robot

**The Problem**:
Marine oil pollution is a future fact for Cyprus. At the moment we are surrounded with all this oil platforms getting ready to start their operations.

- Oil spills often take a deadly toll on fish, shellfish, and other marine life.
- When oil eventually stops floating on the water's surface and begins to sink into the marine environment, it can have similar damaging effects on fragile underwater ecosystems, killing or contaminating fish and smaller organisms that are essential links in the global food chain.

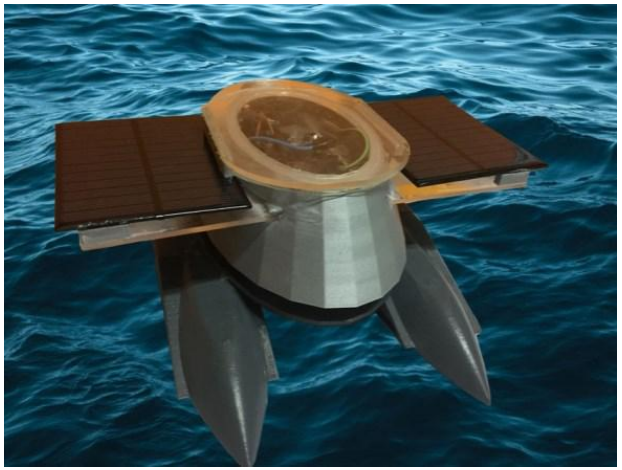

**Solution of the problem**:
Creating a smart sustainable robot, that will be monitoring the sea and sent signal for any oil spill that may occur.

# Sea Monitoring Robot

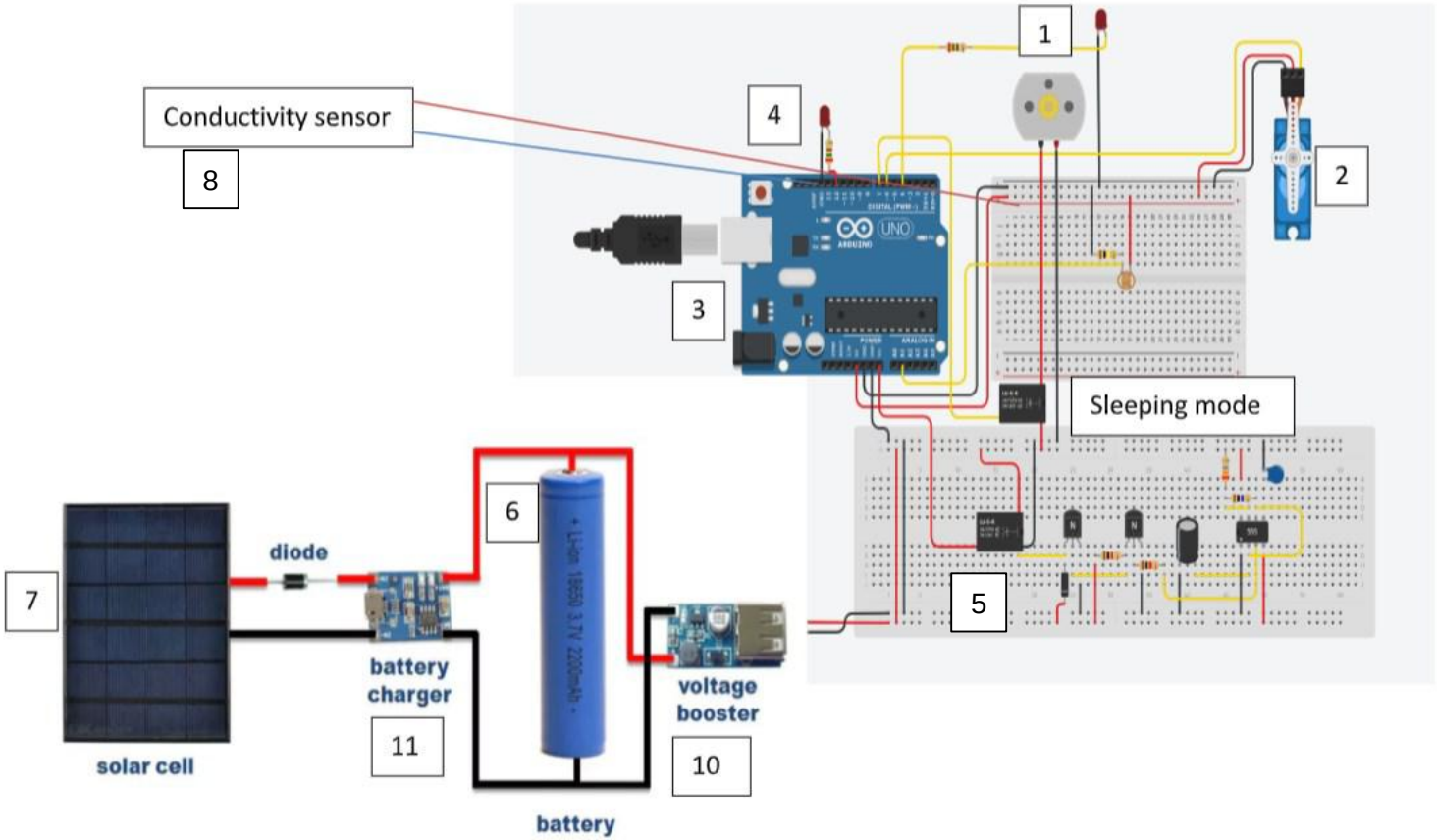

# Sea Monitoring Robot

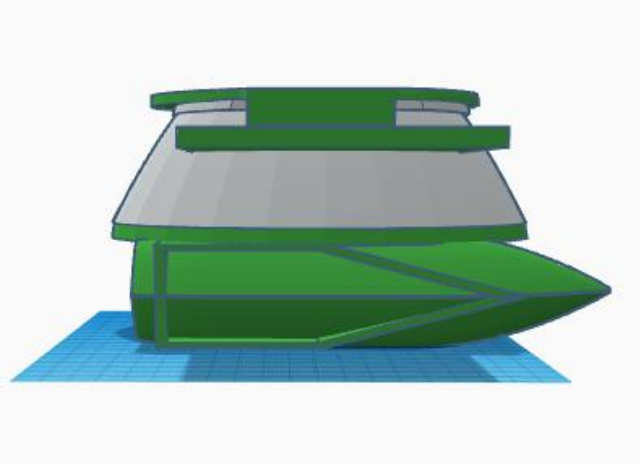

**3D Design of the project**

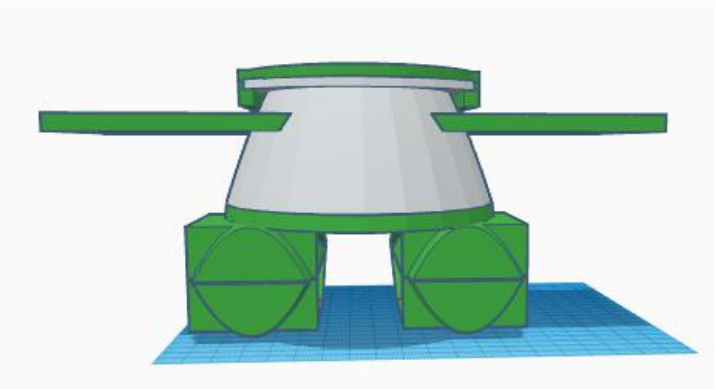

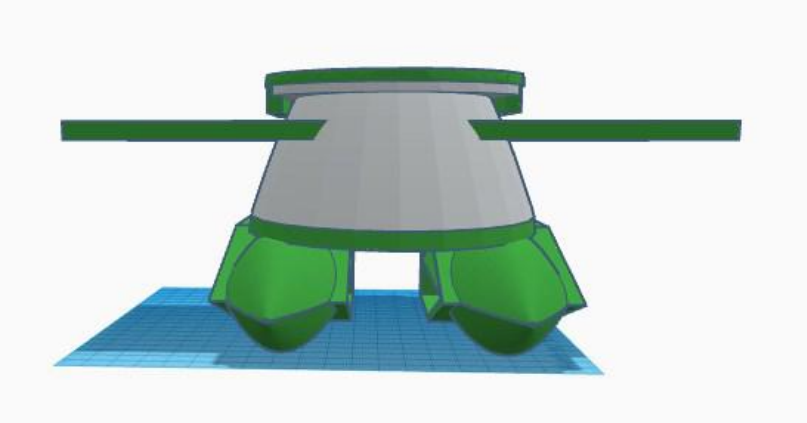

# Sea Monitoring Robot

**Technical Specification of the structure**

✓It features solar energy power for sustainability.
✓It can float on water.
✓During the daylight is on idle mode charging the batteries.
✓During the night, it starts operating
✓The robot will explore an area to find out possible oil spills.
✓It will sent a notification signal to a master computer with the location of the spill. (Future upgrade)
✓The robot can be upgraded in order to provide also a cleaning oil spill solution.

# Sustainability for this initiative

- Collaborations with Universities
- EU Funds
- Governmental Funds
- Collaboration with Local Municipalities
- Crowdfunding

# THANK YOU!

Marios Pieri
Giannis Liasi

NTSomnii LTD
www.ntsomnii.com
marios.pieri@ntsomnii.com
giannis.liasi@ntsomnii.com